PRODUCT SHEET

Oluce Atollo Opal Glass Lamp

LA9387

SOURCE: https://www.davidvillagelighting.co.uk/product/Oluce-Atollo-Opal-Glass-Lamp/9863



PRODUCT DESCRIPTION

Designer: Vico Magistretti

Oluce Atollo Opal Glass Table Lamp

The Oluce Atollo Opal Glass Table Lamp offers a refined take on Vico Magistretti's 1977 design. Featuring the same award-winning geometric form, this version replaces the metal construction with opaline blown Murano glass for a softer and more diffused light. The lamp's hemispherical shade and sleek cylindrical base create a harmonious silhouette, making it both a functional light source and a sculptural object. Perfect for adding a warm glow to interiors, the Atollo Opal Glass Table Lamp embodies timeless elegance and craftsmanship.

Available in small, medium and large sizes, the Atollo Opal Glass Table Lamp complements a range of interior styles, from contemporary to classic. Its gentle illumination is ideal for creating cosy atmospheres in living rooms, bedrooms, or professional settings. As a landmark in Italian design, the Atollo Opal Glass Lamp is a must-have for design enthusiasts and those seeking understated luxury.

Please Note: The Oluce Atollo Opal Glass Table Lamp has a pre-installed bulb fitted into the base of the lamp.

PRODUCT SPECIFICATION

Light Source:	**Small:** 2x Max 40W E14 + 1x Max 25W E14 (Included, 25W E14 Pre-Installed) **Medium:** 2x Max 75W E27 (Included, 40W E14 Pre-Installed) **Large:** 2x Max 100W E27 + 2x max 25W E14 (Included, 25W E14 Pre-Installed)
IP Code:	20
Dimming:	**Small:** In-line on/off switch included on cable **Medium & Large:** In-line dimmer included on cable
Dimensions:	**Small:** Shade: Ø25cm Height: 35cm Base: Ø10cm **Medium:** Shade: Ø38cm Height: 50cm Base: Ø15cm **Large:** Shade: Ø50cm Height: 70cm Base: Ø20cm

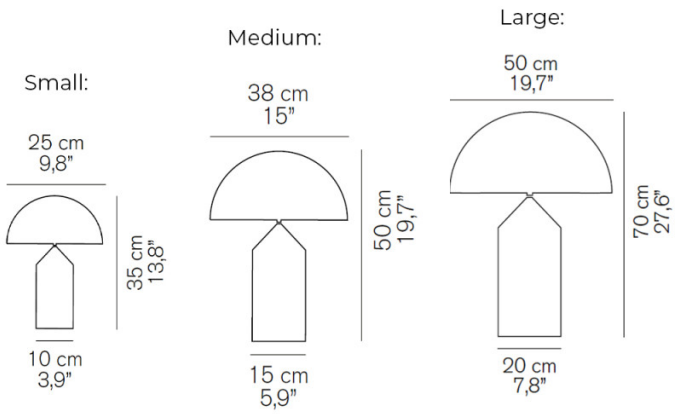



For all sales and technical enquiries, please contact:

+44 (0)114 263 4266

info@davidvillagelighting.co.uk

www.davidvillagelighting.co.uk