PRODUCT SHEET

LA8325

Artemide Tolomeo LED Table Lamp

SOURCE: https://www.davidvillagelighting.co.uk/product/Artemide-Tolomeo-LED-Table-Lamp/5287



PRODUCT DESCRIPTION

Designer: Michele De Lucchi & Giancarlo Fassina

Artemide Tolomeo LED Table Lamp

Artemide Tolomeo LED Table Lamp retains the clean and minimalist lines that have defined Tolomeo since 1987, using an aluminium and steel structure with an integrated LED source and a stamped aluminium reflector for uniform light distribution. Designed by Michele De Lucchi and Giancarlo Fassina, it brings the collection's balance between functionality and aesthetics into a table format with a warmer 3000K output.

The articulated arm system remains central to the design. An innovative spring mechanism allows the lamp to be adjusted in height and tilt, while the movable head directs light exactly where it is needed. This listed version is supplied with the aluminium table base, so the composition stays focused on the classic desk format rather than the interchangeable clamp or fixed support options.

Artemide Tolomeo LED Table Lamp is available here as the body lamp with an aluminium table base, combining the familiar Tolomeo silhouette with an integrated dimmer on the product and a more contained LED light source. Best suited for desks, home working spaces, bedside tables, and reading corners where an adjustable table lamp is needed with a clear, established design language.

PRODUCT SPECIFICATION

Light Source:	8W, 3000K, 761 Lumens
IP Code:	20
Dimming:	Integrated dimmer on the product.
Dimensions:	Height: 64.5cm Length: 78cm Base: Ø23cm Max Extension Height: 129cm Max Extension Length: 122cm Cable Length: 120cm

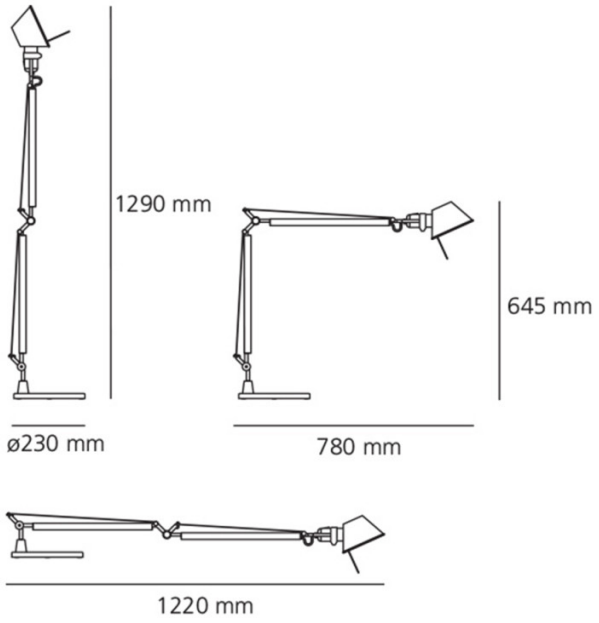



For all sales and technical enquiries, please contact:

+44 (0)114 263 4266

info@davidvillagelighting.co.uk

www.davidvillagelighting.co.uk