PRODUCT SHEET

FOSCARINI

LA8310-M

# Foscarini Caboche Plus LED Floor Lamp

SOURCE: https://www.davidvillagelighting.co.uk/product/Foscarini-Caboche-Plus-LED-Floor-Lamp/4995



## PRODUCT DESCRIPTION

**Designer:** Patricia Urquiola & Eliana Gerotto

### Foscarini Caboche Plus LED Floor Lamp

The Caboche Plus Floor Lamp is a mosaic of bright and rich refractions, embellishing any room with its extraordinary lighting effect. Described as a “bracelet of sparkling transparent pearls”, when turned on the light diffuses from inside the spheres light bright crystals, bathing interiors in reflective jewel-like light. The Caboche Plus Floor Lamp has a metal base with a circular design that reflects the shape of the diffuser, the lamp adds a touch of charm to the most varied of settings.

Composed of 363 transparent polymethylmetacrylate spheres and available in at transparent finish, the Caboche Plus transforms light into a sparkling composition of transparent spheres: a design gem resulting from an amalgam of technology and creativity. Designed by Patricia Urquiola and Eliana Gerotto, the Carboche Plus for Foscarini is rich, bright and sophisticated. See the rest of the Caboche Collection.

## PRODUCT SPECIFICATION

| | |
|---|---|
| **Light Source:** | **Medium**: 23W, 2700K, 3200 Lumens<br>**Large**: 28W, 2700K, 3850 Lumens |
| **IP Code:** | 20 |
| **Dimming:** | In-line dimmer included on cable. |
| **Dimensions:** | **Medium**:<br>Shade Height: 20cm<br>Full Height: 154cm<br>Base With: 50cm<br>Cable Length: 200cm<br><br>**Large**:<br>Shade Height: 28cm<br>Full Height: 178cm<br>Base Width: 70cm<br>Cable Length: 210cm |

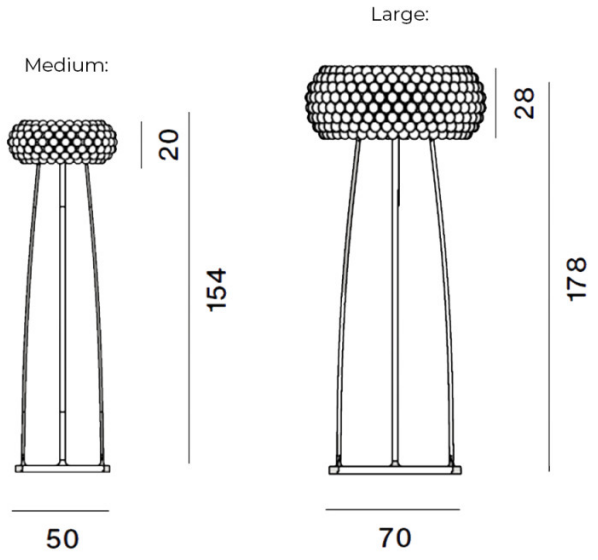




**For all sales and technical enquiries, please contact:**

+44 (0)114 263 4266

info@davidvillagelighting.co.uk

www.davidvillagelighting.co.uk