PRODUCT SHEET

Artemide Tizio Micro Table Lamp

LA8082-B

SOURCE: https://www.davidvillagelighting.co.uk/product/Artemide-Tizio-Micro-Table-Lamp/398



PRODUCT DESCRIPTION

Designer: Richard Sapper

Artemide Tizio Micro Table Lamp

A more compact version of the classic Artemide lighting solution, the Tizio Micro Table Lamp provides the same functional and directional illumination but in a smaller silhouette. The Artemide Tizio Micro Table Lamp comes in a black finish with adjustable counterbalanced arms and head in painted aluminium. Like many others in the collection, it is fitted with an integrated dimmer in the base of the lamp, allowing you to personalise the illumination when turned on.

The Tizio Micro was designed by Richard Sapper, who has won awards for the range, and is ideal for when space is tight. The counterbalance system ensures that Tizio is always in balance and can be set in almost any position, becoming a reliable feature on your desk. Tizio Micro is the smallest version in the **Tizio Collection**, which also includes two larger sizes of the Table Lamp and floor stands to make your Tizio Lamp even more adaptable.

PRODUCT SPECIFICATION

Light Source:	1 x Max 2.4W 12V G4 LED (Excluded)
IP Code:	20
Dimming:	Integrated dimmer on the product.
Dimensions:	Height: 23-76cm Length: 49.5-68cm Base: Ø9cm

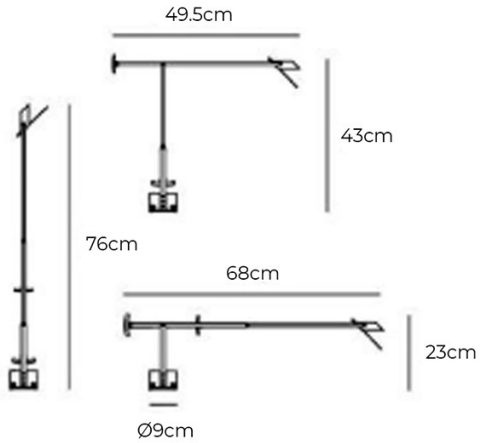



For all sales and technical enquiries, please contact:

+44 (0)114 263 4266

info@davidvillagelighting.co.uk

www.davidvillagelighting.co.uk