PRODUCT SHEET

Sammode

Sammode Studio Pierre Guariche G30 Floor Lamp

LA10101

SOURCE: https://www.davidvillagelighting.co.uk/product/Sammode-Studio-Pierre-Guariche-G30-Floor-Lamp/20358



PRODUCT DESCRIPTION

Designer: Pierre Guariche

Sammode Studio Pierre Guariche G30 Floor Lamp

Originally named ‘The Kite’ by designer Pierre Guariche, the G30 Floor Lamp by Sammode Studio makes a striking addition to any interior. Its sculptural shade, crafted from lacquered perforated steel, evokes the sail of a boat and creates a sense of escape and relaxation. A high-grade metal base and reflector produce a soft, diffused glow. This glare-free lighting is perfect for creating a comfortable and inviting atmosphere in dining rooms, living areas, and studies.

Available with either a contrasting black-and-white shade or a monochrome white finish, Pierre Guariche’s original design retains its high-quality construction and light output while incorporating the latest technology. All Sammode Studio luminaires are manufactured, assembled and packaged at the company’s production plant in Châtillon-sur-Saône, in France’s Vosges region.

PRODUCT SPECIFICATION

Light Source: 1 x Max 11W E27 LED (Excluded)

IP Code: 20

Dimming: In-line dimmer included on cable.

Dimensions: Height: 153cm
Shade Height: 59cm
Depth: 39cm
Width: 45cm
Cable Length: 250cm

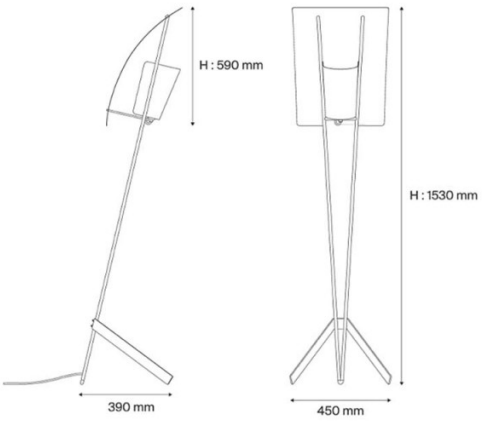



For all sales and technical enquiries, please contact:

+44 (0)114 263 4266

info@davidvillagelighting.co.uk

www.davidvillagelighting.co.uk