PRODUCT SHEET

NEMO

LA10094/WC

Nemo Lighting Projecteur 165 Wall / Ceiling Light

SOURCE: https://www.davidvillagelighting.co.uk/product/Nemo-Lighting-Projecteur-165-Wall-Ceiling-Light/20346



PRODUCT DESCRIPTION

Designer: Le Corbusier

Projecteur 165 Wall / Ceiling by Nemo Lighting

Designed by Le Corbusier in 1954, the 165 Wall Ceiling Light is the mini adjustable version of the 365 design as part of the wider Projecteur collection. The directional nature of the light make this a perfect wall or ceiling spot lamp, that will look good in a variety of settings or rooms. By using opal glass, the diffused light gives a warm incandescence and the ability to dim, by using a dimmable bulb, means this light is the ideal mood setter.

Line your entrance hall to create a warm welcome, or use the 165 light to create a cosy lounge environment alongside other lights from the collection. With three mellow colours for you to choose from, you can mix and match or simply stick with one colour scheme to add the final flourishing touch to your space.

PRODUCT SPECIFICATION

Light Source: 1 x Max 23W E27 (Excluded)

IP Code: 20

Dimming: Dimmable via mains phase dimming.

Dimensions: Height: 18cm
Shade: Ø17cm
Wall Mount: Ø11cm

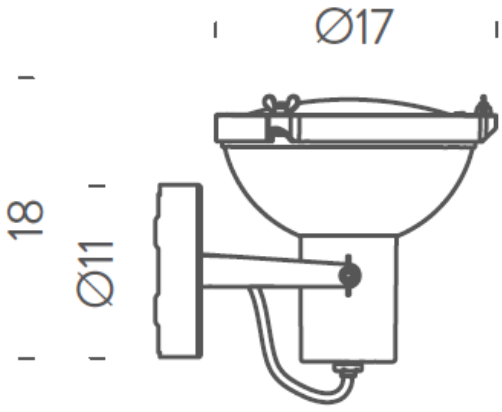



For all sales and technical enquiries, please contact:

+44 (0)114 263 4266

info@davidvillagelighting.co.uk

www.davidvillagelighting.co.uk