PRODUCT SHEET

marset

LA5872

Marset Copernica M LED Table Lamp

SOURCE: https://www.davidvillagelighting.co.uk/product/Marset-Copernica-M-LED-Table-Lamp/19826



PRODUCT DESCRIPTION

Designer: Ramirez i Carrillo

Marset Copernica M LED Table Lamp

Marset Copernica M LED Table Lamp is an adjustable table light by Ramírez i Carrillo, designed around a system of counterweights that allows the lamp to move with very little effort. Its geometric structure is made up of circles, slender bars, and tubes, with the different elements balanced against one another. The result is a distinctive design that almost appears to float, combining the appearance of a geometric sculpture with the functionality of a practical task light.

The counterweight system allows the arm to be raised, lowered, and repositioned to direct light towards different areas of a desk or work surface. The aluminium diffuser can also be tilted, giving you further control over the direction of the light. This makes Copernica particularly useful for reading, working, or drawing, as the light can be brought closer when needed and moved aside afterwards. Its open structure also gives it a striking appearance when placed on a larger desk, sideboard, or table in a contemporary living space.

Copernica M is available in Graphite-Satin Nickel-Black and Graphite-Red-Black finishes, with a steel structure and an aluminium diffuser. The integrated LED provides warm 2700K light, while a three-position dimmer built into the diffuser allows the brightness to be adjusted directly on the lamp. The wider Marset Copernica collection also includes floor lamps that use the same counterweight mechanism. Most suited to home offices, studies, desks, reading areas, living rooms, and commercial workspaces where directional lighting and adjustability are important.

PRODUCT SPECIFICATION

Light Source: 5.94W, 2700K, 416 Lumens

IP Code: 20

Dimming: Integrated dimmer on the product.

Dimensions: Height: 60.3cm
Arm Length: 106cm
Shade: Ø12cm
Base: Ø21cm
Counterweight: Ø7.5cm
Cable Length: 200cm

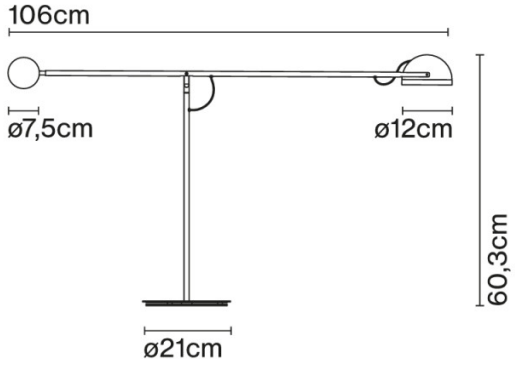



For all sales and technical enquiries, please contact:

+44 (0)114 263 4266

info@davidvillagelighting.co.uk

www.davidvillagelighting.co.uk