PRODUCT SHEET

LA3706

Light Attack Rap-D Downlight Directional LED

SOURCE: https://www.davidvillagelighting.co.uk/product/light-attack-rap-d-downlight-directional-led/19258

PRODUCT DESCRIPTION

Light Attack Rap-D Downlight Directional.

This downlight provides outstanding performance for both ambient lighting and a wall washing effect when fitted with asymmetric optical compartment.
Main features: aluminium casting coasted with embossed effect; thin flange that blends into the ceiling. Photo-engraved shade with light-diffusing and protective function. With inclined optical compartment for optimal asymmetric emission.

30 degree beam angle.

Supplied with individual mains dimmable driver.
1-10v and Dali available on request.

Suitable for use in bathrooms, zone 1, 2 and 3.

Also available with different beam angles. For more information, please contact us.

PRODUCT SPECIFICATION

Light Source: 10W, 3000K, 1310 lumens
IP Code: 65
Dimensions: 64mm cut out

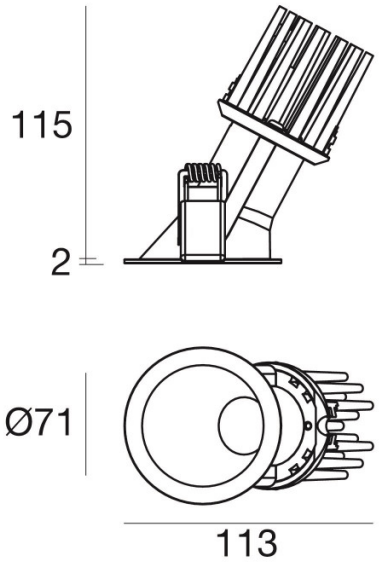

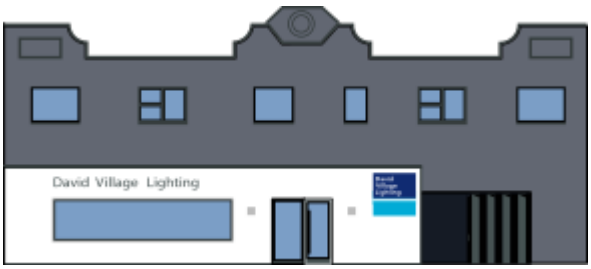

For all sales and technical enquiries, please contact:

+44 (0)114 263 4266

info@davidvillagelighting.co.uk

www.davidvillagelighting.co.uk