PRODUCT SHEET

Artemide Yanzi LED Table Lamp

LA5347

SOURCE: https://www.davidvillagelighting.co.uk/product/Artemide-Yanzi-LED-Table-Lamp/18868



PRODUCT DESCRIPTION

Designer: Neri&Hu

Artemide Yanzi LED Table Lamp

The Artemide Yanzi Table Lamp is an elegantly unique lighting solution, designed by Neri & Hu. The design studio was inspired by the plethora of swallows resting on a nearby scaffolding, and the Yanzi was created. The Artemide Yanzi Table Lamp has a lightweight composition with these figures of swallows balancing on a perch or branch. The bird is depicted with a brass streamlined body and a glass sphere as a head, where the light is diffused.

Yanzi can be characterised by its organic silhouette and its invitation to interact with the luminaire. Thanks to the glass globe diffuser, the inner light source is emitted beautifully into the room, and the output can be personalised via a dimmer on the cable. A striking addition to living areas, bedrooms and reading nooks. The Yanzi lights can create a lightweight composition and form a light landscape in any interior, adding a poetic elegance.

PRODUCT SPECIFICATION

Light Source: 9.5W, 3000K, 623 Lumens

IP Code: 20

Dimming: In-line dimmer included on cable.

Dimensions: Diffuser: Ø9cm
Length: 28cm
Height: 16.3cm
Width: 15.2cm

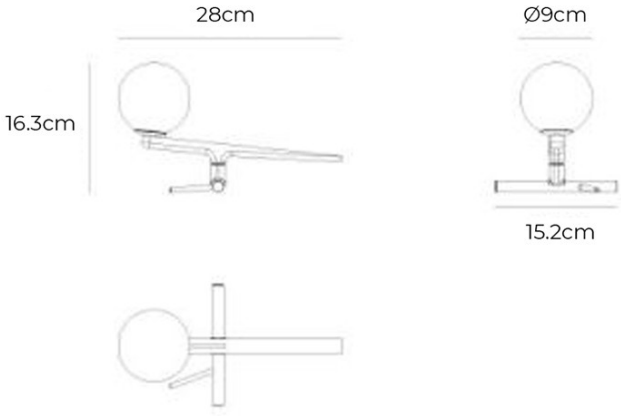



For all sales and technical enquiries, please contact:

+44 (0)114 263 4266

info@davidvillagelighting.co.uk

www.davidvillagelighting.co.uk