PRODUCT SHEET

FERM LIVING

LA5087/HS

Ferm Living Collect High Socket Pendant Disc

SOURCE: https://www.davidvillagelighting.co.uk/product/Ferm-Living-Collect-High-Socket-Pendant-Disc/18464



PRODUCT DESCRIPTION

Designer: Ferm Living

Ferm Living Collect High Socket Pendant Disc

Designed as part of Ferm Living's Collect Lighting system, the Collect High Socket Pendant Disc offers a refined yet versatile lighting solution. With its taller socket design and compact Disc shade, this pendant provides a distinctive presence while maintaining a minimalist aesthetic. The powder-coated metal construction ensures durability, while the elegant finish choices allow for easy integration into any interior setting.

Ideal for creating statement lighting above dining tables, kitchen counters, or entryways, the high socket version offers an elongated form that enhances the fixture's visual impact. Featuring a fabric-covered 3-metre cord, a decorative ring, and a coordinating ceiling canopy, this pendant combines function with contemporary design. The dimmable function enables users to customise the lighting intensity to fit any atmosphere.

Please note, this product is also available in a Low Socket version, a Bell Socket version and a Brass Shade version.

PRODUCT SPECIFICATION

Light Source:	1 x Max 13W LED E27 (Excluded)
IP Code:	20
Dimming:	Dimmable via mains phase dimming.
Dimensions:	Socket Height: 17cm Socket: Ø5.5cm Shade Height: 7cm Shade: Ø12cm Cable Length: 300cm

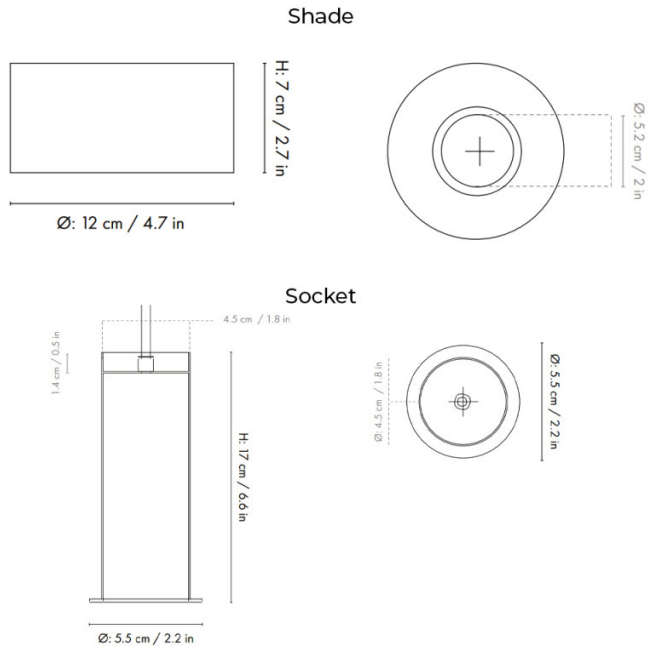



For all sales and technical enquiries, please contact:

+44 (0)114 263 4266

info@davidvillagelighting.co.uk

www.davidvillagelighting.co.uk