PRODUCT SHEET

Moooi T Lamp LED Floor Lamp

LA4945

SOURCE: https://www.davidvillagelighting.co.uk/product/moooi-t-lamp-led-floor-lamp/18250

PRODUCT DESCRIPTION

Designer: Marcel Wanders

T-Lamp by Moooi

T-Lamp was designed by Marcel Wanders for Dutch manufacturer, Moooi. The concept behind the lamp was based on kinetics and energy, gracefully tied together. Perhaps it is why the floor lamp reminds us of the innovative mobiles by American sculptor, Alexander Calder. T-Lamp floor lamp maintains its balance via a solid marble base and the counter weight. With a slim and streamlined silhouette, the lamp is the perfect lighting solution for any interior space. The lamp benefits from an integrated LED source, which can be dimmed, allowing you to tailor the light brightness. You can adjust the position of the light, as the horizontal stem can be tilted to a certain degree, constantly maintaining the perfect equilibrium.

PRODUCT SPECIFICATION

Light Source: 20W, 2700K, 1150 Lumens

IP Code: 20

Dimming: In line dimmer included on cable.

Dimensions: Height: 184.8cm
Width: 44cm
Length: 198.7cm
Cable Length: 350cm

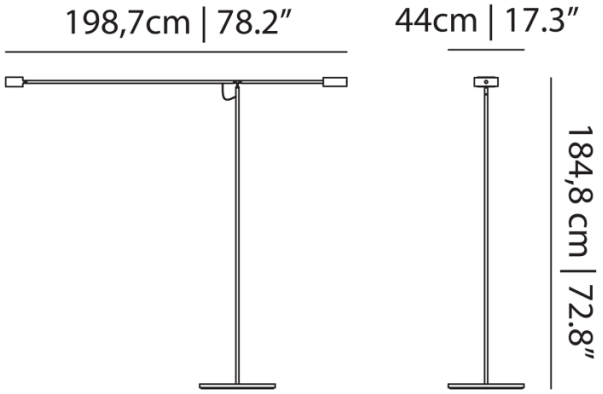

For all sales and technical enquiries, please contact:

+44 (0)114 263 4266

info@davidvillagelighting.co.uk

www.davidvillagelighting.co.uk