PRODUCT SHEET

Flos Kelvin LED Edge Table Lamp

LA4402

SOURCE: https://www.davidvillagelighting.co.uk/product/Flos-Kelvin-LED-Edge-Table-Lamp/17303



PRODUCT DESCRIPTION

Designer: Antonio Citterio

Flos Kelvin LED Edge Table Lamp

A functional and contemporary masterpiece designed by Antonio Citterio, the Flos Kelvin Edge Table Lamp is perfect for both domestic and professional use. Displaying high levels of craftsmanship in its mechanisms and design, the Kelvin Edge has a directional head which allows the angle of light to be adjusted 180 degrees, making it perfect as a reading companion or task light.

Along with the adjustability of both the arms and the lighting output of the Kelvin LED Edge Table Lamp, the head of the light also features soft-touch dimmer technology. The dimmer changes the colour temperature in three stages, going from 2700K (warmest white) to 3200K (warm white), so you can create the ambience you need in your interior. This modern lighting solution can be used individually or alongside other designs in the **Kelvin collection**.

PRODUCT SPECIFICATION

Light Source:	7W, 2700K-3200K, 306 Lumens
IP Code:	20
Dimming:	Integrated dimmer on the product.
Dimensions:	Lamp Head: 85cm Height: 41.4cm Length: 47.3cm Base: 15cm x 15cm Cable Length: 150cm

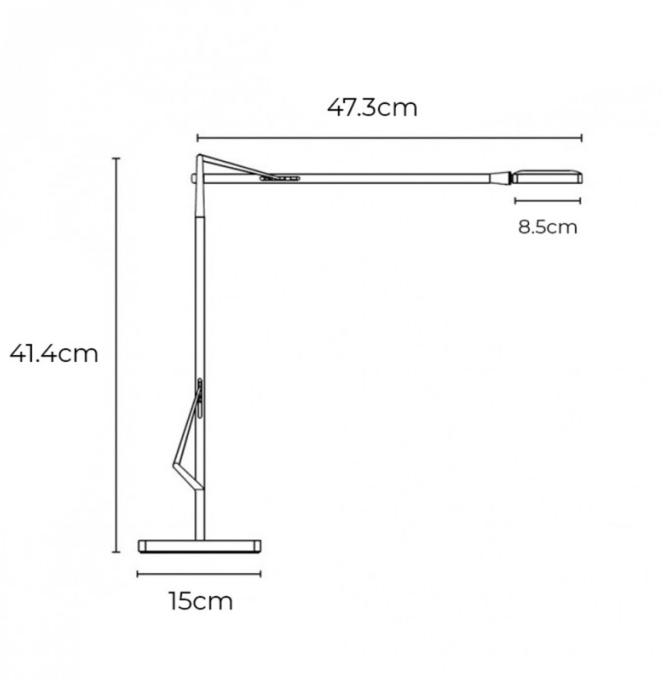



For all sales and technical enquiries, please contact:

+44 (0)114 263 4266

info@davidvillagelighting.co.uk

www.davidvillagelighting.co.uk