PRODUCT SHEET

Foscarini Big Bang LED Pendant

LA9376/LLED

SOURCE: https://www.davidvillagelighting.co.uk/product/Foscarini-Big-Bang-LED-Pendant/17058

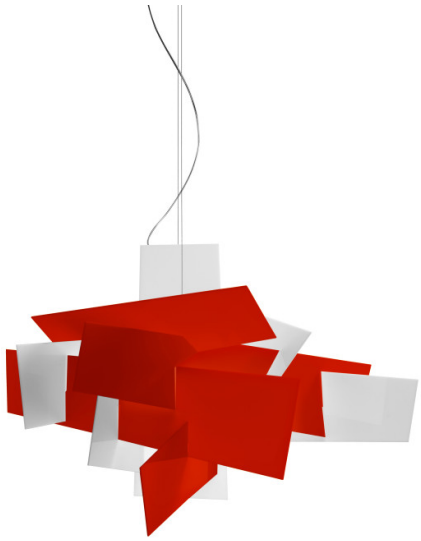

PRODUCT DESCRIPTION

Designer: Enrico Franzolini & Vicente Garcia Jimenez

Foscarini Big Bang LED Pendant

The Big Bang LED pendant is aptly named as the design is based on the aesthetic of an explosion. The plates are seemingly placed in random and dynamic shapes, built from the centre outwards to evoke the motion and action of explosion. The integrated LED light source is in the middle of the lampshade, covered by the multiple slabs producing a diffused light that emanates in all directions, playing with the concept of light and shade.

The Big Bang LED pendant light is available in either a white or red finish and is perfect for many settings. The pendant particularly thrives in larger open areas or rooms with higher ceilings to make a dramatic and artistic impact in the space. It can be used as a singular main light or put in rows to produce a bigger illumination. Wonderful for lighting the entire room, you can get a bigger size with the Big Bang XL pendant and you can check out other choices from the Foscarini Big Bang collection to use in your interior.

The Foscarini Big Bang LED Pendant is also available in a dimmable version in either a standard or large size with a red or white finish. Please contact us for more details.

PRODUCT SPECIFICATION

Light Source:	37W, 3000K, 3260 Lumens
IP Code:	20
Dimming:	Non-Dimmable.
Dimensions:	Body: Ø90cm Body Height: 63cm Ceiling Rose: Ø22cm Cable Length: 320cm

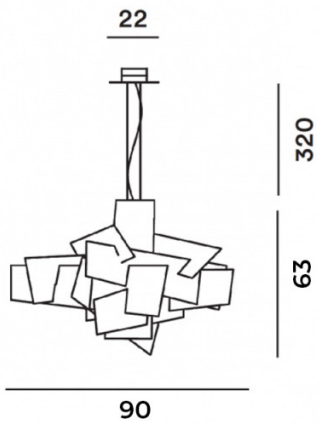

For all sales and technical enquiries, please contact:

+44 (0)114 263 4266

info@davidvillagelighting.co.uk

www.davidvillagelighting.co.uk