PRODUCT SHEET

ANGLEPOISE

Anglepoise Type 75 Mini Lamp with Wall Bracket

LA3190

SOURCE: https://www.davidvillagelighting.co.uk/product/anglepoise-type-75-mini-lamp-with-wall-bracket/16187

PRODUCT DESCRIPTION

Designer: Sir Kenneth Grange

Type 75 Mini Lamp with Wall Bracket by Anglepoise

As part of the Anglepoise Type 75 Mini collection, the Type 75 Mini lamp with wall bracket is a versatile and compact light designed by Sir Kenneth Grange.

A smaller version of the Type 75 lamp with wall bracket, this light can be easily attached to the wall to act as a rotational and adjustable wall light that can be used as a desk light that saves space or as an interesting lounge light. With a directional light, this wall mounted mini lamp is perfect in both professional and domestic interiors and can be used even in the smallest spaces thanks to its compact size. Available in 3 colours and equipped with the signature Anglepoise constant spring technology, the Type 75 mini wall mounted lamp is a must have, to act both as a stylish light feature and as a functional task light.

PRODUCT SPECIFICATION

Light Source:	1 x max 6W E27 LED (included)
IP Code:	20
Dimming:	Integrated on/off switch on the product
Dimensions:	Ø13cm shade 15cm shade height Ø9.5cm wall bracket 63cm max. horizontal reach 180cm cable length

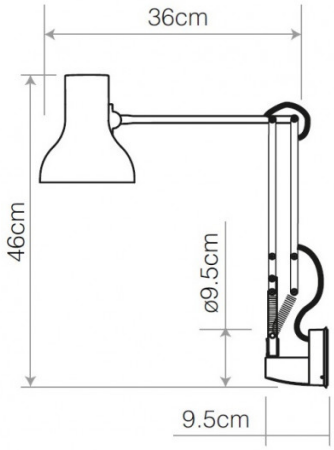

For all sales and technical enquiries, please contact:

+44 (0)114 263 4266

info@davidvillagelighting.co.uk

www.davidvillagelighting.co.uk