PRODUCT SHEET

FLOS

LA8297/GM

Flos Kelvin LED Table Lamp Green Mode

SOURCE: https://www.davidvillagelighting.co.uk/product/Flos-Kelvin-LED-Table-Lamp-Green-Mode/13327



PRODUCT DESCRIPTION

Designer: Antonio Citterio

Flos Kelvin LED Table Lamp Green Mode

The Flos Kelvin Table Lamp by Antonio Citterio delivers direct light, with a double pantograph arm and swivelling head. The body of the Kelvin is made from cast aluminium alloy, with the outside of the head in die-cast aluminium with an injection-moulded polycarbonate diffuser.

A truly contemporary design, the Kelvin Table Lamp with green mode is the perfect accompaniment to a work area or as a reading light. The dimmer switch on the head of the Kelvin has two modes: Personal Mode, which allows the user to adjust light intensity as required and the new Green Mode, which automatically adjusts the light intensity depending on the surrounding ambience. When set in Green Mode, the Kelvin LED switches off automatically, and only lights as the room darkens. The table lamp is available in four finishes, black, white or anthracite, and makes a perfect addition to any contemporary interior.

The Kelvin table lamp is supplied with a square base as seen in the images, but is also available with a clamp or desk support. Please contact us for prices and details.

PRODUCT SPECIFICATION

Light Source:	8W, 3000K, 285 Lumens
IP Code:	20
Dimming:	Integrated dimmer on the product.
Dimensions:	Height: 48cm Length: 58.1cm Lamp Head: 10cm Cable Length: 180cm

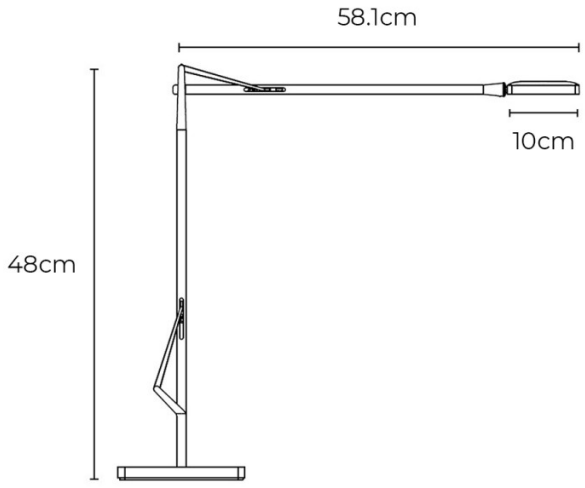



For all sales and technical enquiries, please contact:

+44 (0)114 263 4266

info@davidvillagelighting.co.uk

www.davidvillagelighting.co.uk