PRODUCT SHEET

FRITZ HANSEN

LA6321

Fritz Hansen Caravaggio Read Wall Light

SOURCE: https://www.davidvillagelighting.co.uk/product/Fritz-Hansen-Caravaggio-Read-Wall-Light/13189



PRODUCT DESCRIPTION

Designer: Cecilie Manz

Fritz Hansen Caravaggio Read Wall Light

The Caravaggio Read Wall Light is a minimalist and stylish choice for your space, characterised by its elegant shade and clean lines. The lampshade can be adjusted up to 180° to the point where you need, offering directional illumination whether you want to create a spotlight over a frame or simply light up your corridor or hallway.

The Caravaggio Read Wll Light is available in 4 minimalistic colours, so you can find the right finish to match your design scheme. This wall light is perfect in kitchens, hallways, lounges and many more spaces, suitable for big commercial spaces and cosy home settings alike.

Please Note: The Caravaggio Read Wall Light is supplied with a cable and plug, so must be installed near a socket.

PRODUCT SPECIFICATION

Light Source:	1 x Max 46W E27 (excluded)
IP Code:	20
Dimming:	Integrated on/off switch included on the product.
Dimensions:	Shade: Ø14cm Depth: 35cm Shade Height: 20.6cm Cable Length: 150cm

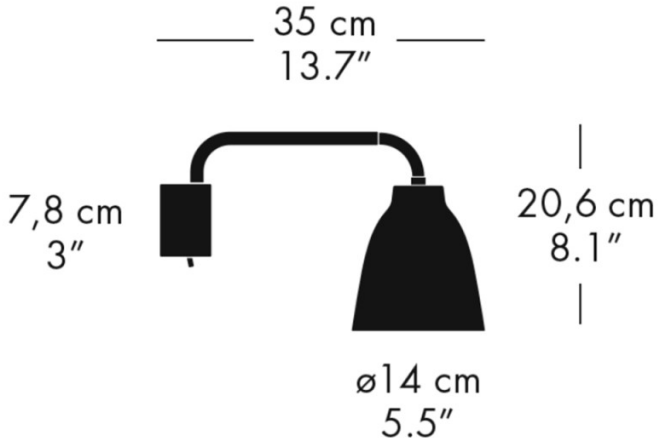



For all sales and technical enquiries, please contact:

+44 (0)114 263 4266

info@davidvillagelighting.co.uk

www.davidvillagelighting.co.uk