PRODUCT SHEET

HAY

HAY Posto Table Lamp

LA11477

SOURCE: https://www.davidvillagelighting.co.uk/product/HAY-Posto-Table-Lamp/10002860

PRODUCT DESCRIPTION

Designer: Claire Lavabre

HAY Posto Table Lamp

Designer Claire Lavabre created the Posto Table Lamp for HAY. The compact lamp offers a graphic yet understated expression through a minimalistic form. Stripped back to its essential elements, the Posto is free from any unnecessary details, including visible screws. A groove on the cylindrical stem holds the cable in place, maintaining the sense of precision and clarity. Crafted from aluminium, the Posto is comprised of three elements, ensuring durability and ease of assembly.

The Posto Table Lamp seamlessly blends form with function. When switched on, the lamp provides a comfortable downlight, perfect for use as a task light at a desk. Display in a study, beside a bed, or on a shelf in a living area for a functional light that doesn't draw attention. Its silver-grey finish creates a timeless aesthetic that complements residential and commercial interiors alike.

PRODUCT SPECIFICATION

Light Source:	1 x Max 8W E14 LED (Excluded)
IP Code:	20
Dimming:	In-line on/off switch included on cable.
Dimensions:	Width: 14cm Depth: 17cm Height: 28cm Cable Length: 240cm

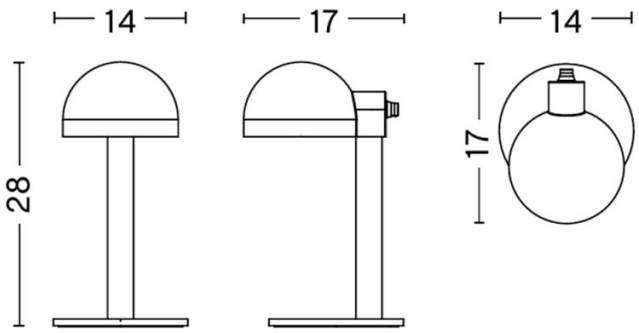

For all sales and technical enquiries, please contact:

+44 (0)114 263 4266

info@davidvillagelighting.co.uk

www.davidvillagelighting.co.uk