PRODUCT SHEET

Vibia Asia LED Table Lamp

LA11468/T

SOURCE: https://www.davidvillagelighting.co.uk/product/Vibia-Asia-LED-Table-Lamp/10002822



PRODUCT DESCRIPTION

Designer: Antoni Arola

Vibia Asia LED Table Lamp

Vibia Asia LED Table Lamp brings the collection's pitched-roof shade into a smaller, more personal format for desks, bedside tables, and reading corners. The lacquered glass softens the light as it falls onto the surface below, giving the lamp a warm, useful glow rather than a harsh task light. The adjustable shade lets you angle the light where it is needed, so it works well for reading, working, or adding a softer pool of light beside a bed or chair.

The Vibia Asia LED Table Lamp is available in two versions, each offering a different lamp head. The Single version, model 3635, has one shade and one inner light source, making it the more compact choice for desks, bedside tables, and smaller side tables. The Double version, model 3637, has a longer double shade and two inner light sources, giving a wider spread of light across the surface below, with a form that Vibia relates to classic library lamps.

Both versions use a 2700K LED source with a Volumetric Diffuser effect, producing close and even light for reading or focused tasks. The lacquered glass filters the light with the delicacy of rice paper, while the Black, Warm White, and Beige finishes allow the lamp to sit quietly within different interiors. Most suited to desks, bedside tables, reading areas, sideboards, and hotel rooms.

PRODUCT SPECIFICATION

Light Source: **Single (3635):** 3.4W, 2700K, 331 Lumens
Double (3637): 2 x 3.4W, 2700K, 662 Lumens

IP Code: 20

Dimming: Integrated dimmer on the product.

Dimensions:

Single (3635):
Height: 40cm
Width: 30cm
Base: 18cm

Double (3637):
Height: 40cm
Width: 55cm
Base: 18cm

Cable Length: 250cm

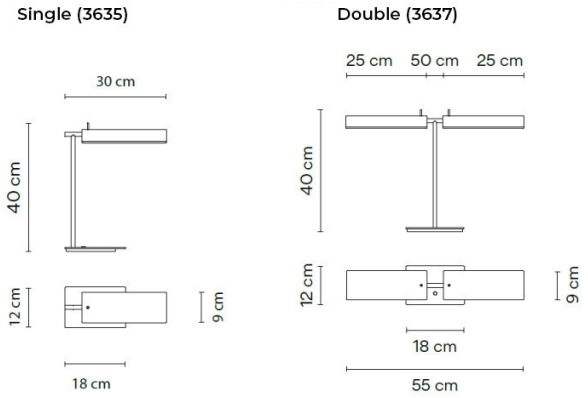



For all sales and technical enquiries, please contact:

+44 (0)114 263 4266

info@davidvillagelighting.co.uk

www.davidvillagelighting.co.uk