PRODUCT SHEET

J. Adams & Co Nova Wide Pendant

LA11300

SOURCE: https://www.davidvillagelighting.co.uk/product/J-Adams-Co-Nova-Wide-Pendant/10002479



PRODUCT DESCRIPTION

Designer: Will Earl

J. Adams & Co Nova Wide Pendant

Inspired by Art Deco, the Nova Wide Pendant is a striking expression of modernist design that highlights the beauty of mouth-blown glass. Expertly crafted by artisans, each pendant is skilfully formed by hand. The opaline, sandblasted shade has a porcelain-like texture – a softness that contrasts effectively against the striking metal frame. This solid machined brass appears to piece through the shade whilst anchoring the design. The Nova Wide Pendant is available in four elegant finishes: Antique Brass, Satin Brass, Bronze, and Satin Nickel.

When illuminated, the opaline glass creates a warm, diffused light that adds a soft and ethereal atmosphere to the room. The sculptural form is well-suited to both residential and hospitality settings. The welcoming ambience it creates is ideal for use over dining tables. Install multiple pendants in a row to run the length of a long table. In larger areas such as an entryway, grand installations can be created by installing clusters of pendants, hung at varying heights.

The Nova Wide Pendant's drop rod is available with a choice of length. Please **Contact us** for more information.

Please Note: The J. Adams Nova Pendant rod is supplied with a joint that allows for mounting on a pitched roof.

PRODUCT SPECIFICATION

Light Source: 1 x Max 9.5W E27 LED (Included)

IP Code: 20

Dimming: Dimmable via mains phase dimming.

Dimensions: Ø42cm
Height: 25.5cm
Drop Height: 37.5cm - 127.5cm
Ceiling Rose: Ø9.5cm

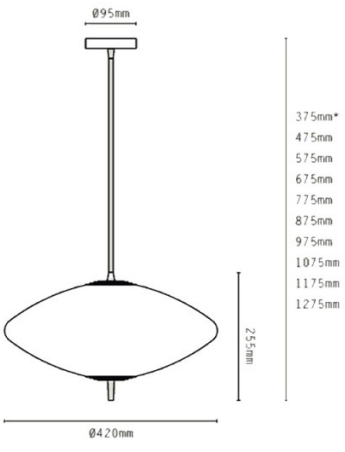

*choose total drop - longer drop available at extra cost



For all sales and technical enquiries, please contact:

+44 (0)114 263 4266

info@davidvillagelighting.co.uk

www.davidvillagelighting.co.uk