PRODUCT SHEET

Nordlux Coupar LED Solar Outdoor Portable Lamp

LA11227

SOURCE: https://www.davidvillagelighting.co.uk/product/Nordlux-Coupar-LED-Solar-Outdoor-Portable-Lamp/10002328



PRODUCT DESCRIPTION

Designer: Says Who

Nordlux Coupar LED Solar Outdoor Portable Lamp

Designed by Danish design duo Says Who with functionality in mind, the Nordlux Coupar LED Portable Lamp is a modern take on a traditional lantern. This contemporary lighting solution harnesses a solar-powered LED light source, using the sun's energy to power its light source during the day, and then emitting a warm glow when the sun goes down. The integrated dimmer allows you to choose between three light intensities to create the perfect ambience for your space, and the handle built into Coupar means you can carry the luminaire with you from room to room, or take it with you for picnics or relaxing camping getaways.

Coupar features a textured transparent diffuser, allowing the warm illumination to spread evenly onto nearby surfaces whilst also adding texture to the design. This portable exterior lamp is available in two finishes, either black or sand, and is a gorgeous way to illuminate gardens, patios and al fresco dining areas. The Nordlux Coupar Portable Lamp offers a cosy pocket of light for warm summer evenings spent with friends.

PRODUCT SPECIFICATION

Light Source:	3.2W, 3000K, 150 Lumens
IP Code:	44
Dimming:	Integrated dimmer on the product.
Dimensions:	Height: 22cm Height with Handle: 29cm Width: 14cm Charging Cable: 150cm

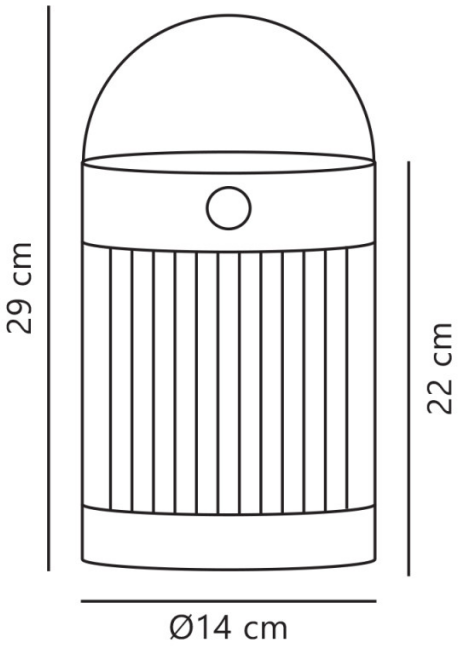



For all sales and technical enquiries, please contact:

+44 (0)114 263 4266

info@davidvillagelighting.co.uk

www.davidvillagelighting.co.uk