PRODUCT SHEET

Zero Lumo LED Ceiling Light

LA11053

SOURCE: https://www.davidvillagelighting.co.uk/product/Zero-Lumo-LED-Ceiling-Light/10001885



PRODUCT DESCRIPTION

Designer: Thomas Bernstrand

Zero Lumo LED Ceiling Light

Designed by Thomas Bernstrand in 2024, the Zero Lumo LED Ceiling Light combines clean Scandinavian lines with durable construction, offering a functional yet stylish lighting solution for both outdoor and indoor use. Its conical shade is formed from painted die-cast aluminium and finished in matte black (RAL 9005), paired with a prismatic acrylic diffuser that gently disperses the light. With an IP65 and IK10 rating, the Lumo Ceiling Light is robust enough for exposed areas and high-traffic settings, making it ideal for patios, bathrooms, entrances, or hospitality environments.

Providing direct downward illumination at 3000K, the Lumo creates a focused but softened glow that enhances ambience while ensuring visual clarity. Whether installed as a single fixture to subtly elevate a space, or grouped in multiples for architectural effect, the Lumo adds sleek industrial character without overwhelming its surroundings.

Please note, custom colours and alternate colour temperatures (2700K and 4000K) are available for this product. Contact us for pricing and information.

PRODUCT SPECIFICATION

Light Source: 10W, 3000K, 660 Lumens

IP Code: 65

Dimming: Non-Dimmable.

Dimensions: Shade: Ø25cm
Height: 21.6cm
Canopy: Ø10cm

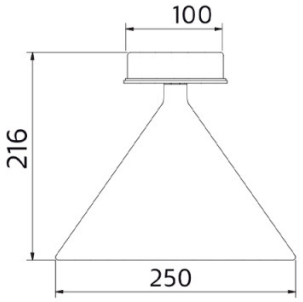

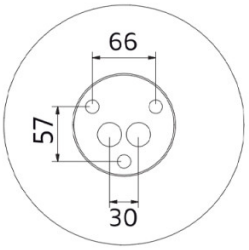



For all sales and technical enquiries, please contact:

+44 (0)114 263 4266

info@davidvillagelighting.co.uk

www.davidvillagelighting.co.uk