PRODUCT SHEET

NUURA

Nuura Liila 1 Outdoor Wall Light

LA10974

SOURCE: https://www.davidvillagelighting.co.uk/product/Nuura-Liila-1-Outdoor-Wall-Light/10001686

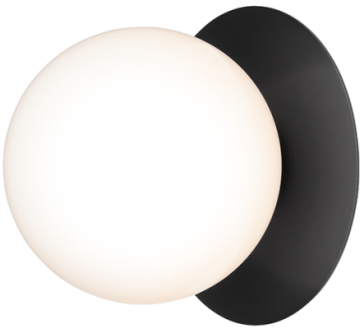

PRODUCT DESCRIPTION

Designer: Sofie Refer

Nuura Liila 1 Outdoor Wall Light

Nuura Liila 1 Outdoor Wall Light was created by Danish designer, Sofie Refer. Purposefully designed to be displayed and illuminated in entrance areas of homes, inside and outside to create a warm welcoming atmosphere. A thin round sheet of metal comprises the base and is topped with a glass globe from which a soft, evenly diffused light is spread on all surrounding areas. Liila 1 Outdoor is an extension of the **Liila collection**.

Liila 1 Outdoor Wall Light has been designed in two back plate colours and two glass shade options. The powder-coated back plates are available in black and dark bronze colourways whilst the glass shade can be either opal or clear etched. Liila 1 adds a touch of sophistication and luxury to any space, be it a home or a commercial establishment. These minimalist wall lights can be displayed independently or beautifully in pairs for an elevated aesthetic.

PRODUCT SPECIFICATION

Light Source:	1x Max 7W, G9 LED (Excluded)
IP Code:	54
Dimming:	Dimmable via mains phase dimming
Dimensions:	Back plate: ø 10.5cm Glass Shade: ø 14cm Depth: 17cm

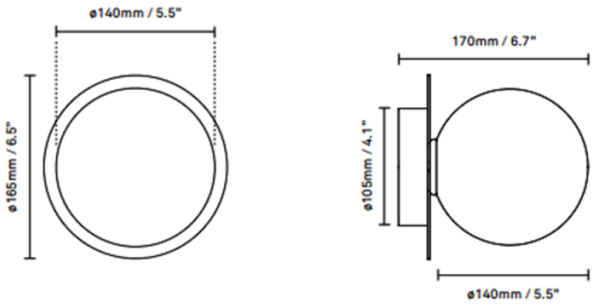



For all sales and technical enquiries, please contact:

+44 (0)114 263 4266

info@davidvillagelighting.co.uk

www.davidvillagelighting.co.uk