PRODUCT SHEET

LYFA Ergo Table Lamp

LA10884

SOURCE: https://www.davidvillagelighting.co.uk/product/LYFA-Ergo-Table-Lamp/10001355



PRODUCT DESCRIPTION

Designer: Bent Karlby

LYFA Ergo Table Lamp

LYFA Ergo Table Lamp was designed by Bent Karlby. Ergo Table Lamp features a luxury wooden stand in either walnut or oak and a premium three-layered opal glass shade. The plastic shade has now given way to a glass shade which is now available in two different colourways: grey and sand. When lit, the interior glass glows softly white, while the exterior glass shade adopts a pleasant warm ambience. The darker the room, the more magical the outcome becomes.

The Ergo Table Lamp conveys relaxed, diffused lighting to its surroundings through its multi-layered design. **Lyfa Ergo collection** also includes a pendant in the two same colours.

PRODUCT SPECIFICATION

Light Source:	1x Max 40W, E27 (Excluded)
IP Code:	20
Dimming:	In-line dimmer switch on cable
Dimensions:	Height: 20cm Diameter: Ø 25cm

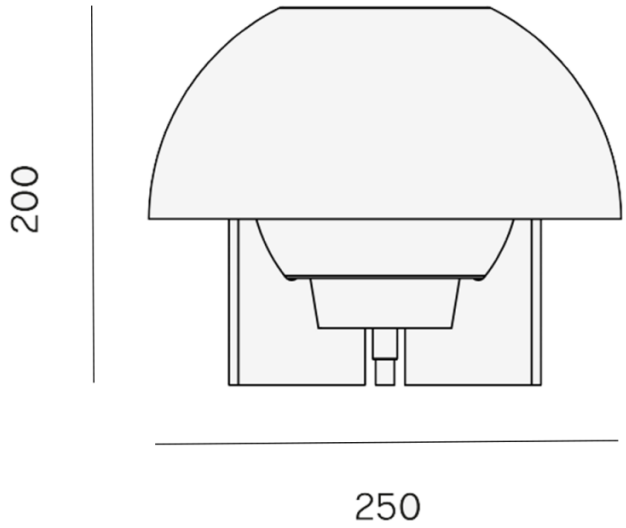



For all sales and technical enquiries, please contact:

+44 (0)114 263 4266

info@davidvillagelighting.co.uk

www.davidvillagelighting.co.uk