PRODUCT SHEET

LA10576/CEILING

Artemide Stellar Nebula LED Ceiling Light

SOURCE: https://www.davidvillagelighting.co.uk/product/Artemide-Stellar-Nebula-LED-Ceiling-Light/10001010



PRODUCT DESCRIPTION

Designer: BIG

Artemide Stellar Nebula LED Ceiling Light

Designed by BIG for Artemide, the Stellar Nebula Ceiling Light aims to bring attention to classic artisanal glass-blowing techniques. Each diffuser is hand-blown by master glass makers. Afterwards, the glass shape that is created is then treated with a sustainable dichroic finishing process - this finishing process provides the lamp with a solid and protective clear coat, which creates beautiful colour reflections upon the surface when the lamp is illuminated. The dichroic finish utilises a sustainable PVD (which stands for Physical Vapour Deposition). It means it creates 0 emissions, 0 waste and uses only 5% solvents (the average in the industry is 75%).

Artemide Stellar Nebula Ceiling Light utilises the medium-sized diffuser as seen on the **Stellar Nebula Pendant**, with a shorter drop height. This makes it perfect for rooms with lower ceilings. Each diffuser is completely unique due to the fact that they are all hand-made, and the light is evenly distributed around the room. The result is an atmospheric and diffused illumination that boasts colourful reflections and is guaranteed to be an eye catcher.

PRODUCT SPECIFICATION

Light Source:	20W, 3000K, 1890 Lumens
IP Code:	20
Dimming:	Push to make/switch dimming, dimmable using push to make switches. Please consult your electrician, additional wiring may be required on site.
Dimensions:	Shade: Ø30cm Height: 37cm Ceiling Canopy: Ø18.5cm

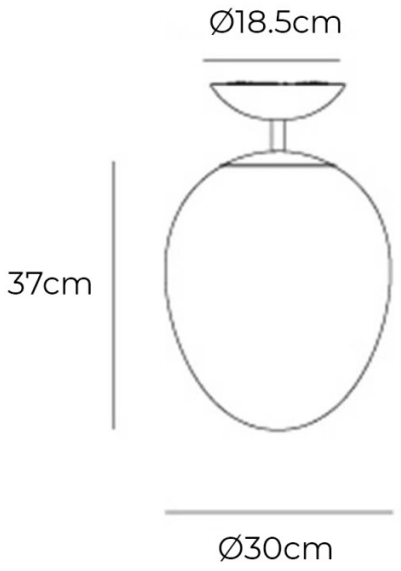



For all sales and technical enquiries, please contact:

+44 (0)114 263 4266

info@davidvillagelighting.co.uk

www.davidvillagelighting.co.uk