PRODUCT SHEET

astro

LA10084/SI

Astro Bayville Single Spot LED Light

SOURCE: https://www.davidvillagelighting.co.uk/product/Astro-Bayville-Single-Spot-LED-Light/10000923



PRODUCT DESCRIPTION

Designer: Astro Design Team

Astro Bayville Single Spot LED Light

The Astro Bayville Single Spot delivers focused, adjustable illumination in a compact and contemporary design. Suitable for both exterior and bathroom use, it carries an IP65 rating that makes it resilient to moisture and outdoor conditions. Mounted to walls, it provides directional task or accent lighting that enhances entrances, gardens, or interior bathrooms with equal sophistication.

Equipped with an 8.2W integrated LED, the Bayville Single produces 467 lumens at 3000K for a warm and inviting glow. The spotlight tilts up to 90° and rotates 330°, offering flexibility to target specific features or adjust the spread of light across a room or outdoor area. With dimming compatibility via leading and trailing edge dimmers, it ensures adaptable control for different moods and settings.

Constructed from durable aluminium in textured finishes of black, grey or white, the Bayville Single blends strength with style. Used individually or paired with other Bayville models, it provides reliable performance and contemporary flair for residential or commercial environments.

PRODUCT SPECIFICATION

Light Source:	8.2W, 3000K, 467 Lumens
IP Code:	65
Dimming:	Dimmable using leading edge and trailing edge.
Dimensions:	Fixture: Ø9.5cm Height: 10cm Depth: 12.5cm

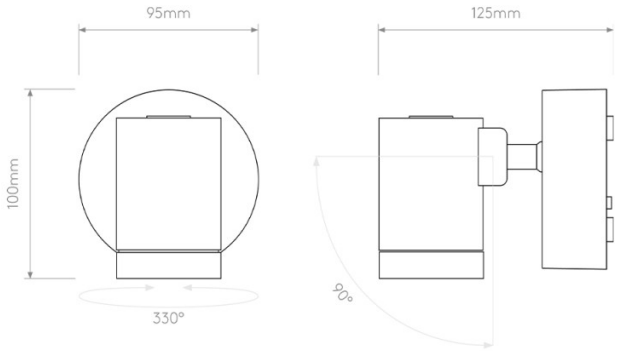



For all sales and technical enquiries, please contact:

+44 (0)114 263 4266

info@davidvillagelighting.co.uk

www.davidvillagelighting.co.uk