PRODUCT SHEET

FLOS

Flos Globall Table Lamp

LA8135

SOURCE: https://www.davidvillagelighting.co.uk/product/flos-globall-table-lamp/780

PRODUCT DESCRIPTION

Designer: Jasper Morrison

Glo-Ball Table Lamp by Flos

A stylish and minimal light by Flos, the Glo-Ball table lamp was designed by Jasper Morrison in 1998. The diffuser is made from hand blown opaline glass while the stem and base are made of high-thickness steel, creating a contemporary and chic look.

The Glo-Ball table light emits a diffused glow and immediately adds a warm ambiance to the room. An excellent choice for both your home or office and commercial spaces, the table light also has an electronic dimmer on the cable allowing you to adjust the brightness. Complement your table lamp with a matching pendant, ceiling, wall or floor light from the Glo-Ball collection.

PRODUCT SPECIFICATION

Light Source:	1 x max 150W E27 T38 (excluded)
IP Code:	20
Dimming:	In line dimmer included on cable
Dimensions:	Ø33cm shade 27cm shade height 60cm height Ø24cm base

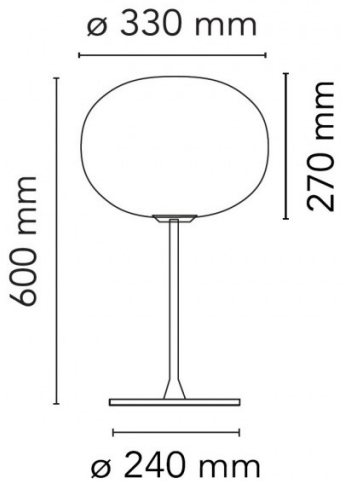

For all sales and technical enquiries, please contact:

+44 (0)114 263 4266

info@davidvillagelighting.co.uk

www.davidvillagelighting.co.uk